1-circuit Pendant adapter

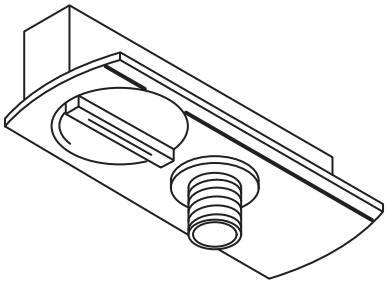

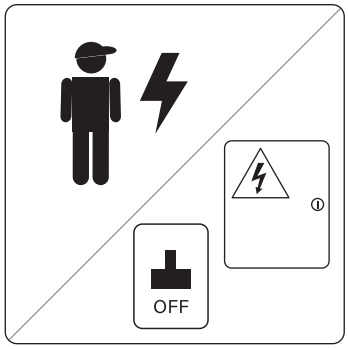

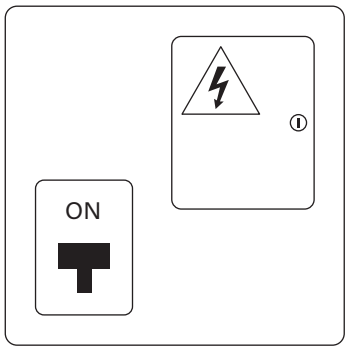

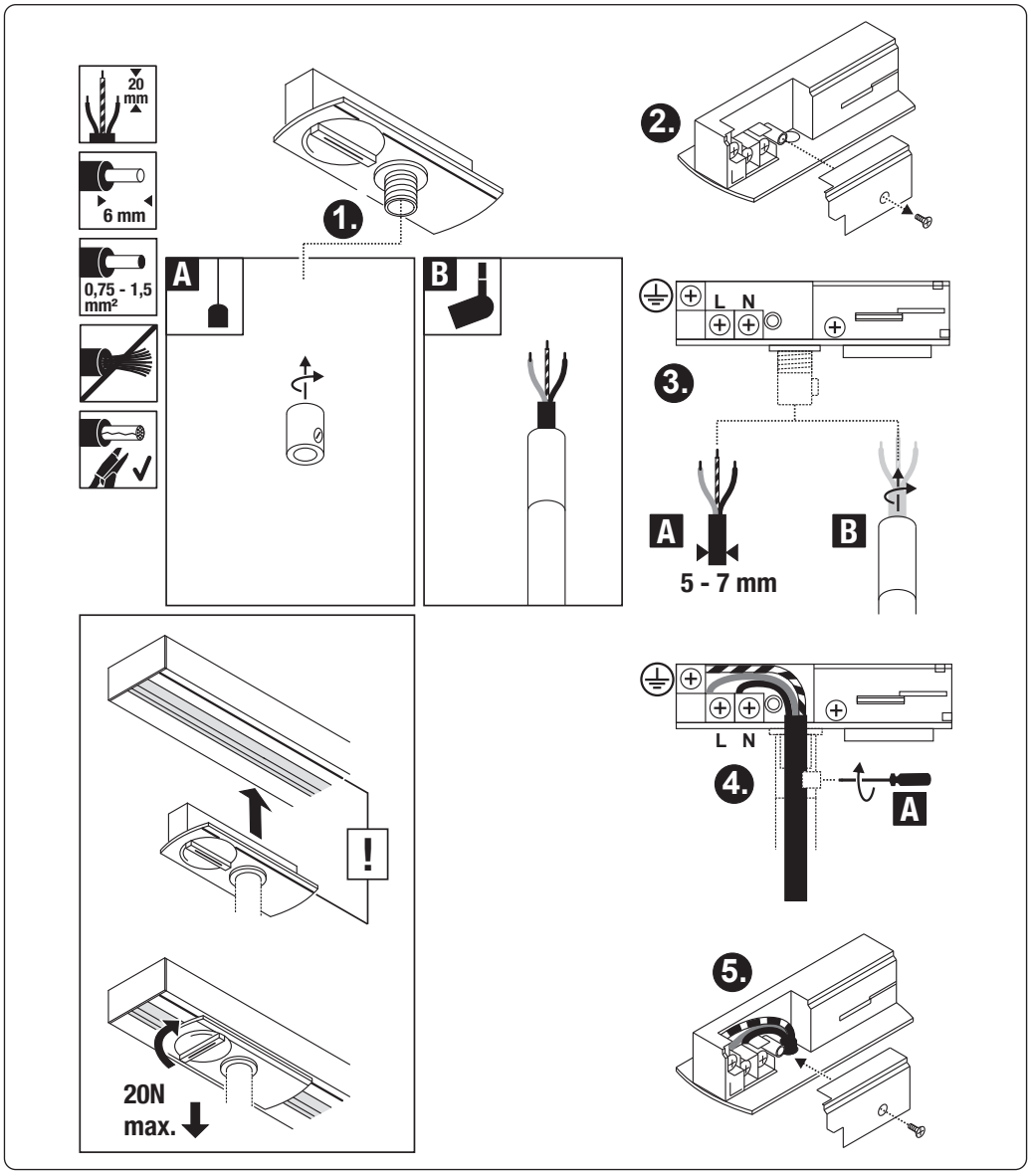

1-C | 220-240 VAC | 6A | IP20 | RoHS

Find the updated manual on our website – nordtronic.com
With reservation for typing errors

Nordtronic A/S | Silovej 8, 12th floor | DK-9900 Frederikshavn | Denmark | CVR: 29808708
Tel: +45 7020 9531 | nordtronic.com

Manual
53901810-53901890 | 03-2026